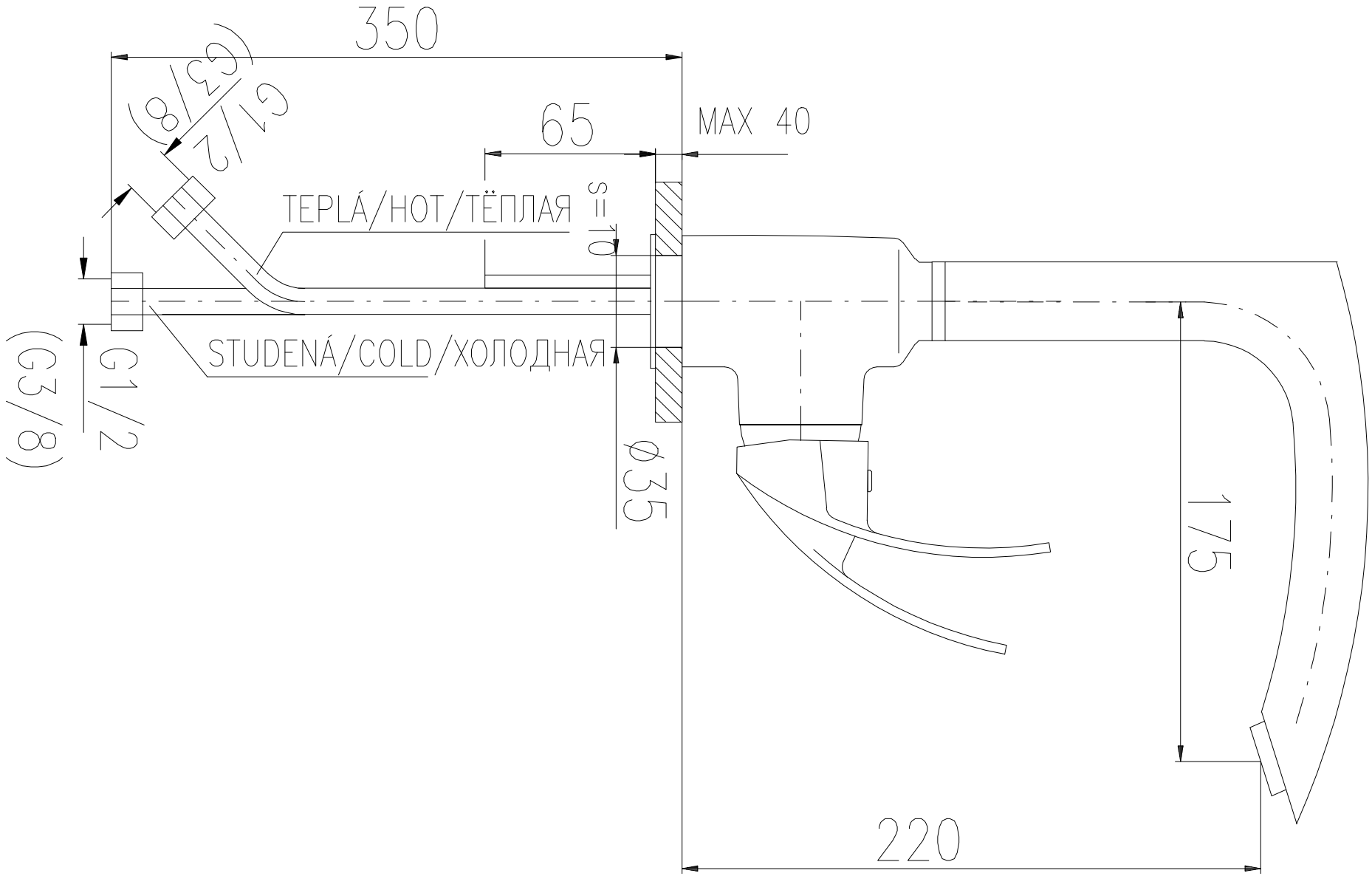
350
G1/2
(G3/8)
65
MAX 40
TEPLÁ/HOT/ТЁПЛАЯ
10
STUDENÁ/COLD/ХОЛОДНАЯ
G1/2
(G3/8)
Ø35
175
220